Data Sheet

Article number: 20032660A
Description: E+G Grub screw
GN 913.2-M10-32-B

Measures

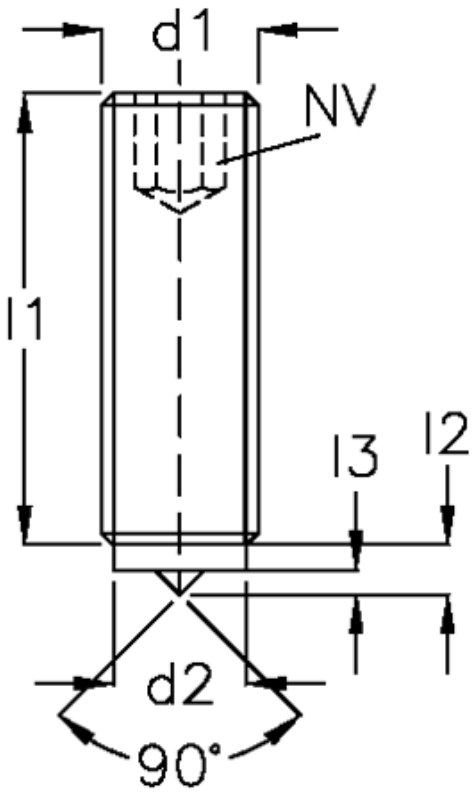

d1 = M10
d2 = 8
l1 = 32
l2 = 3.5
l3 = 1.5
NV = 5.0

Product drawings and brochures of any kind may contain errors for which Brd. Klee A/S cannot be liable.